FROMM | SUSTAINABLE SOLUTIONS

SCRAP CHOPPERS FOR PLASTIC STRAPPING

SWEED MODEL 300
SWEED MODEL 450 DDX

FROMM | SUSTAINABLE SOLUTIONS

SWEED MODEL 300
SCRAP CHOPPER

A Tough Light Duty Scrap Chopper

The SWEED Model 300 scrap chopper is an economical "housekeeping" unit perfect for facilities with lower volumes of scrap materials.

This unit is ideal for plastic and steel banding, and other lightweight scrap materials. The Model 300 is designed to fit on several SWEED stands that can accommodate a variety of scrap collection containers. Custom stands and additional safety upgrades are also available.

The Model300 is shown sitting on and over an optional basic stand and self-dumping hopper.

MATERIAL REFERENCE

The recommended model of scrap chopper is determined by scrap size, scrap volume, and requested custom features. The following are materials commonly processed through the Model 300. Please consult a FROMM representative to determine the appropriate scrap chopper for your application.

» PET strapping
» PP strapping
» Standard grade steel strapping
» For other materials, please consult FROMM

CONSTRUCTION FEATURES

» Easy to reach "Feedworks Release" hand lever
» Infeed restrictor plate for operator protection
» Knives have 4 usable edges and can be rotated (3 times) for extended life
» Two year FROMM warranty

FROMM | SUSTAINABLE SOLUTIONS

SWEED MODEL 300

TECHNICAL SPECIFICATIONS

PERFORMANCE DATA	
Electric Motor	0.5 HP
Electrical	Single Phase, 240 V / 50 Hz / 8 A
Infeed Speed	37 metres / minute
Cut Length	66 mm
Infeed Opening	25 x 41 mm
Number of Stationary Knives	1
Number of Rotating Knives	1
Overall Chopper Dimensions	L 482 x W 762 x H 482 mm
Chopper Weight	61 kg
Chopper Shipping Weight	100 kg

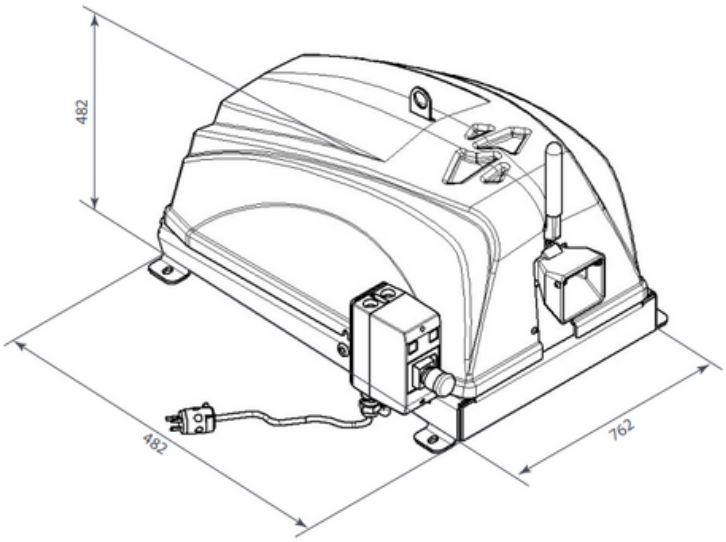

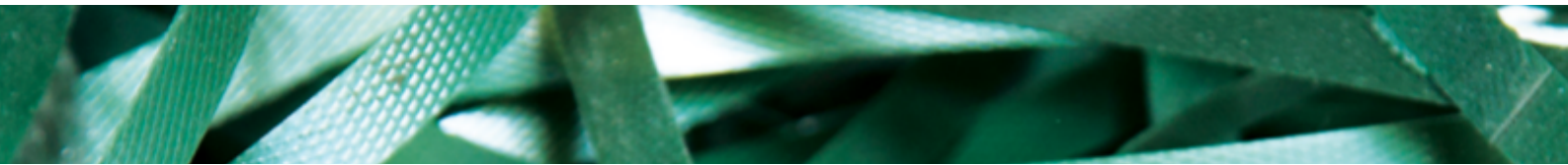

FROMM | SUSTAINABLE SOLUTIONS

SWEED MODEL 450 DDX
SCRAP CHOPPER

Dual Driven Feedworks Increases Feeding Efficiency

The Model 450 DDX boasts power alongside a dual driven feedworks. Driving both feed rolls on the chopper allows the unit to process scrap quickly and efficiently.

The Model 450 DDX is SWEED's chopper of choice for companies processing large volumes of scrap plastic or PET strapping. This chopper is extremely versatile and can be customized for inline automated production applications requiring tension control and custom scrap lengths. The Model 450 DDX is designed to fit on several SWEED stands that can accommodate a variety of scrap collection containers. Custom stands and additional safety upgrades are also available.

The Model 450 DDX is shown sitting on and over an optional basic stand and self-dumping hopper.

MATERIAL REFERENCE

The recommended model of scrap chopper is determined by scrap size, scrap volume, and requested custom features. The following are materials commonly processed through the 450 DDX. Please consult a FROMM representative to determine the appropriate scrap chopper for your application.

» Most sizes of PET/plastic strapping
» Standard grade steel strapping
» Band saw blades
» For other materials, please consult FROMM

CONSTRUCTION FEATURES

» Easy to reach "Feedworks Release" hand lever
» Infeed restrictor plate for operator protection
» Knives have 4 usable edges and can be rotated (3 times) for extended life
» Two year FROMM warranty

FROMM | SUSTAINABLE SOLUTIONS

SWEED MODEL 450 DDX
TECHNICAL SPECIFICATIONS

PERFORMANCE DATA	
Electric Motor	1.0 HP
Electrical	Single Phase, 240 V / 50 Hz / 8 A
Infeed Speed	37 metres / minute
Cut Length	76 mm
Infeed Opening	89 x 25 mm
Number of Stationary Knives	1
Number of Rotating Knives	1 Standard (up to 4 optional)
Overall Chopper Dimensions	L 915 x W 660 x H 330 mm
Chopper Weight	158 kg
Chopper Shipping Weight	197 kg

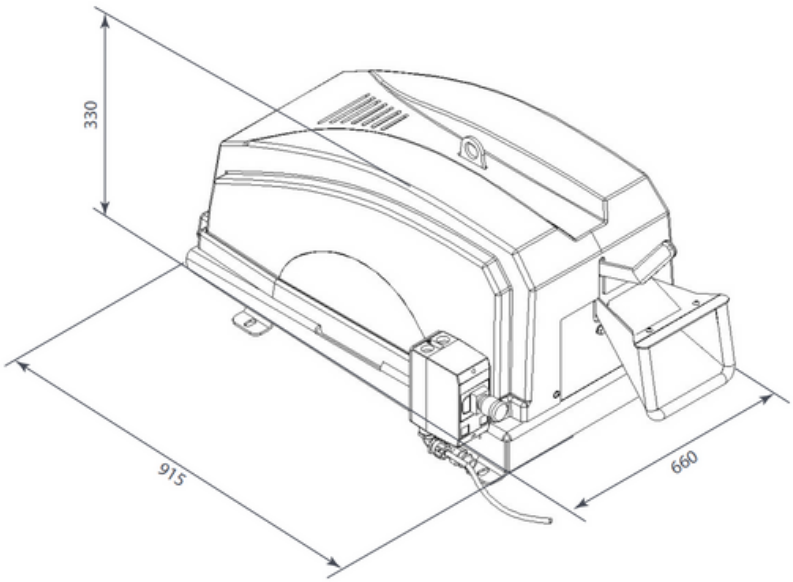

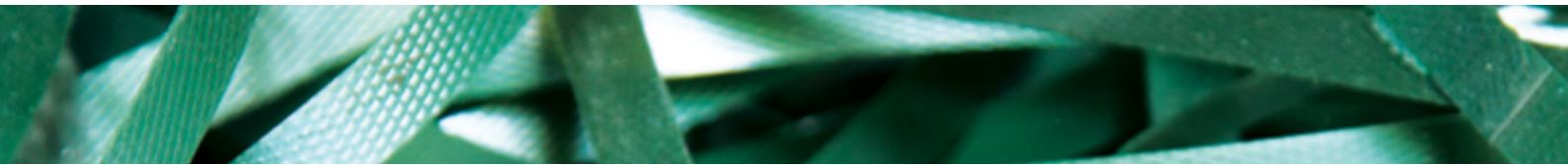

SCRAP CHOPPING FACTS

» A SWEED chopper can reduce waste by a ratio of 10:1.
» The amount of loose, unmanageable plastic strapping that routinely fills a 20 m^3 skip bin can fit into one bulk bag after it's been chopped.
» A bulk bag of chopped plastic strapping weighs about 500 kg.

SCRAP CHOPPER FAQ

Q: How do I know if my company needs a scrap chopper?
In order to decide if your company would benefit from a chopper, you must first evaluate how your company currently manages its scrap:
» Do you use skip bins or containers to collect your strapping?
» How often are the skip bins and containers emptied?
» How full are they when picked up?
» How much does your company spend on scrap disposal?
» How much space is required to store your scrap, and could this space be put to better use?

Q: Why should I buy a scrap chopper when I can just throw my scrap into a skip bin?
» Chopped strapping is compacted and costs less to dispose of.
» As environmental regulations become more stringent, dumping fees will continue to rise.
» Every time you pay to have a skip bin of scrap emptied, you erode your company's profits.
» In some areas, the fee for emptying multiple skip bins may be equal to the price of a SWEED Scrap Chopper!
» By reducing the number of times a skip bin is emptied, many of our customers have seen a six month return on investment in a scrap chopper.

Q: Will I need to hire an additional employee to operate a scrap chopper?
No. You're already paying an employee to handle your scrap once, just to cut banding off a load. Instead of that employee throwing the scrap on the floor, or in the garbage, have them feed it into a scrap chopper! If employees are handling by-products more than once, then streamlining the handling of scrap should be considered to improve the overall efficiency of the facility.

Q: How does a scrap chopper work?
Just introduce the scrap strapping into the infeed funnel. The feedworks will grab the material and pull it into the rotating knife path. The feedworks will continue to pull the scrap in until it is consumed, or until the operator releases the feedworks via the release lever. It's as simple as feed-and-forget!

FROMM Packaging Australia
1800 940 356
www.fromm-pack.com.au
info@fromm-pack.com.au